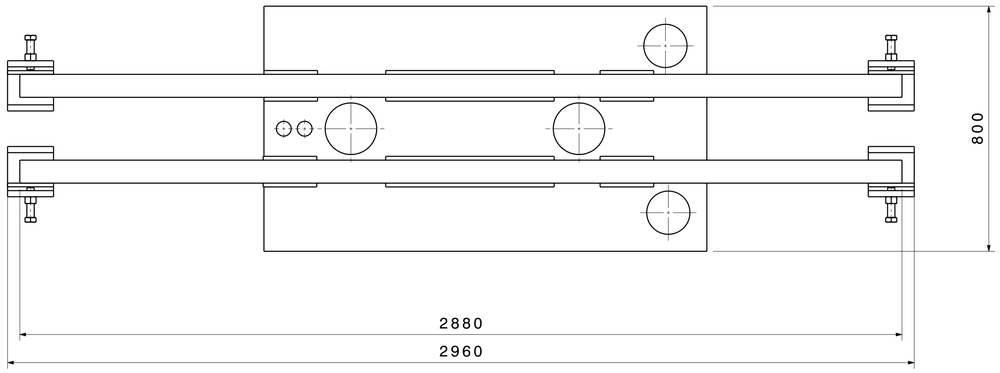

Top view
Scale: 1:10

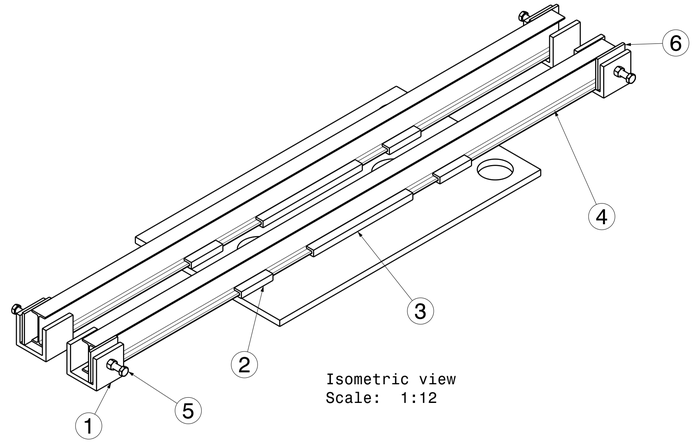

Isometric view
Scale: 1:12

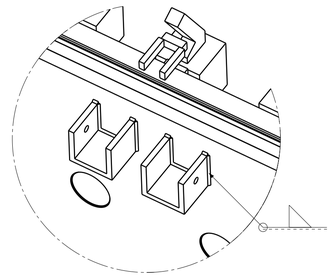

Isometric view
Scale: 1:10

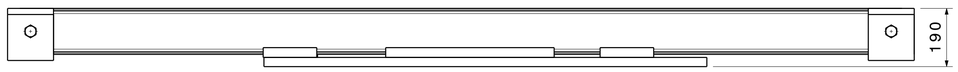

Front view
Scale: 1:10

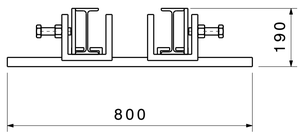

Right view
Scale: 1:10

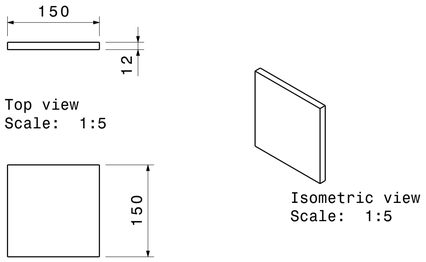

Top view
Scale: 1:5

Isometric view
Scale: 1:5

Front view[6]
Scale: 1:5

5. ION DUMP GUIDE PLATE

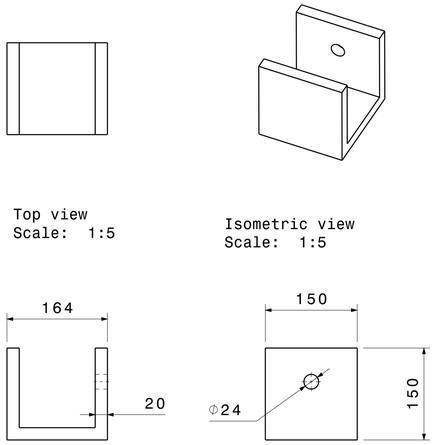

Top view
Scale: 1:5

Isometric view
Scale: 1:5

Front view
Scale: 1:5

Right view
Scale: 1:5

1. ION DUMP WALL SUPPORT

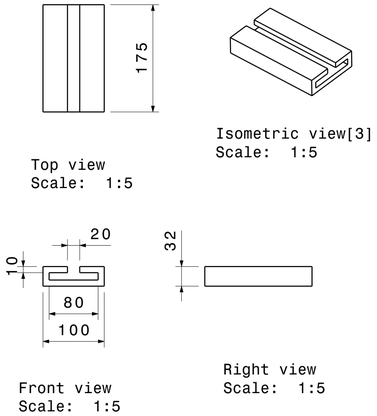

Top view
Scale: 1:5

Isometric view[3]
Scale: 1:5

Front view
Scale: 1:5

Right view
Scale: 1:5

2. HOLDING PLATE-1

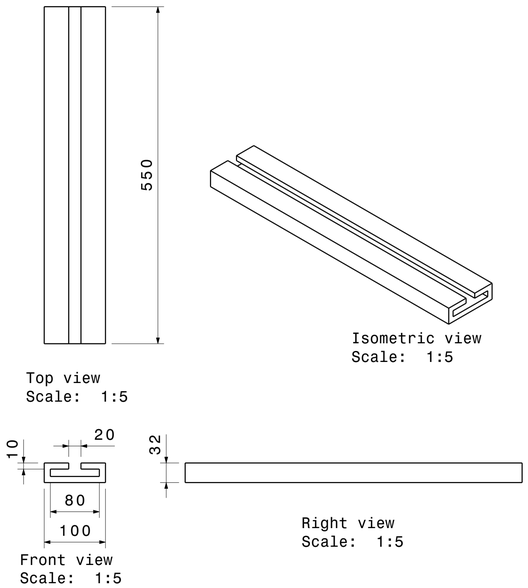

Top view
Scale: 1:5

Isometric view
Scale: 1:5

Front view
Scale: 1:5

Right view
Scale: 1:5

3. HOLDING PLATE-2

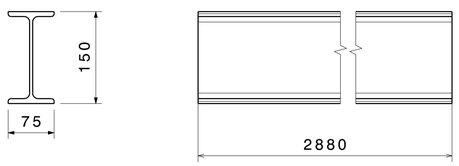

Front view
Scale: 1:5

Right view
Scale: 1:5

4. I - BEAM

NOTE:	
1	THE SCOPE OF SUPPLY FROM THE VENDOR IS AS LISTED IN THE BOM.
2	ALL PIPES ARE OF SCH.10S.
3	REQUIRED PIPES & BENDS ARE FREE ISSUE OF MATERIAL.

PART NO.	DESCRIPTION	MATERIAL	QTY.	REMARKS
1	ION DUMP WALL SUPPORT	SS 304 L	4	
2	HOLDING PLATE-1	SS 304 L	4	
3	HOLDING PLATE-2	SS 304 L	2	
4	I - BEAM	SS 304 L	2	
5	BOLT - NUT	SS 304 L	4	
6	ION DUMP GUIDE PLATE	SS 304 L	4	

DRG.NO	▽ 8-25	▽▽ 1.6-8	▽▽▽ 0.025-1.6	▽▽▽▽ < 0.025
CO-ORDINATED BY				

MACHINING DEVIATIONS FOR NON-TOLERANCED DIMENSIONS

LENGTH IN mm OF SHORTER SIDE OF ANGLES				LENGTH OR DIA	UPTO 6	6-30	30-120	120-315
UPTO 10	10-50	50-120	OVER 120-400					
±1'	±0°-30'	±0°-20'	±0°-10'		±0.1	±0.2	±0.3	±0.5

REVISION COLUMN					
REV	ZONE	DESCRIPTION	DATE	REMARKS	APPROVED BY

NBI GROUP:	SIZE A3	INSTITUTE FOR PLASMA RESEARCH BHAT, GANDHINAGAR-382 428.	
ALL DIMENSIONS ARE IN 'mm' UNLESS OTHERWISE STATED			
SCALE	-	DATE	TITLE: ION DUMP SUPPORT ASSY.
DRAWN	ARK	-	THIRD ANGLE PROJECTION
DESIGNED			REF DRG NO:
APPROVED			DRG.NO 2.04.02.032 — REV R0 — SHEET 01 OF 01